Cogent Business & Management

ISSN: 2331-1975 (Online) Journal homepage: www.tandfonline.com/journals/oabm20

ICT-enabled supply chain integration capabilities and firms' financial performance: an empirical study of Tanzania's manufacturing SMEs

Veneranda Rutainurwa, Beny Mwenda & Baraka Israel

To cite this article: Veneranda Rutainurwa, Beny Mwenda & Baraka Israel (2024) ICT-enabled supply chain integration capabilities and firms' financial performance: an empirical study of Tanzania's manufacturing SMEs, Cogent Business & Management, 11:1, 2393235, DOI: 10.1080/23311975.2024.2393235

To link to this article: https://doi.org/10.1080/23311975.2024.2393235

© 2024 The Author(s). Published by Informa UK Limited, trading as Taylor & Francis Group

Published online: 23 Aug 2024.

Submit your article to this journal

Article views: 1073

View related articles

View Crossmark data

Citing articles: 5 View citing articles

Full Terms & Conditions of access and use can be found at
https://www.tandfonline.com/action/journalInformation?journalCode=oabm20

COGENT BUSINESS & MANAGEMENT
2024, VOL. 11, NO. 1, 2393235
https://doi.org/10.1080/23311975.2024.2393235

INFORMATION & TECHNOLOGY MANAGEMENT | RESEARCH ARTICLE OPEN ACCESS Check for updates

ICT-enabled supply chain integration capabilities and firms' financial performance: an empirical study of Tanzania's manufacturing SMEs

Veneranda Rutainurwa[a], Beny Mwenda[a] and Baraka Israel[b]

[a]Department of Accountancy, College of Business Education, Mbeya, United Republic of Tanzania; [b]Department of Procurement and Supplies Management, College of Business Education, Mbeya, United Republic of Tanzania

ABSTRACT

The spectacular advancement in information and communication technology (ICT) has shaped the way firms conduct their business, interact and communicate with customers and suppliers along their supply chains (SC). Yet, there exists limited knowledge of how investing in ICT can be leveraged to help firms streamline SC integration and achieve sustainable financial performance (FPF). Drawing on dynamic capability theory, this research delineates the dimensions of internal SC integration (ISI) and external SC integration (ESI) as potential mediators of the relationship between ICT capabilities and a firm's FPF. A simple random sampling approach and cross-sectional questionnaire survey were used for data collection from 274 manufacturing SMEs in the Mbeya region, Tanzania. Subsequently, the collected data was analysed using Hayes PROCESS macro model 4 to test the study hypotheses. Empirical results indicate an insignificant direct effect of ICT capabilities on a firm's FPF. However, ICT capabilities significantly and positively affect both ISI and ESI, which in turn play critical mediating roles, positively impacting the firm's FPF. Essentially, the findings imply that the pathway from ICT capabilities to FPF predominantly transpires through enhanced ISI and ESI. As such, the study underscores the importance for SME managers to invest in ICT capabilities and harness such capabilities to strengthen ISI and ESI as the strategic intermediaries that translate ICT investments into tangible financial outcomes. The study contributes to the existing few empirical studies that establish the potential mediating effect of SC integration in the link between ICT capabilities and a firm's FPF.

ARTICLE HISTORY
Received 29 May 2024
Revised 3 August 2024
Accepted 13 August 2024

KEYWORDS
ICT capabilities; internal SC integration; external SC integration; financial performance; manufacturing SMEs

SUBJECTS
Information & Communication Technology (ICT); Management of IT; Finance

1. Introduction

Small and medium-sized manufacturing enterprises (SMEs) play a significant role in economies. They create value utility along supply chains (SC) by converting inputs and raw materials into useful products through various methods, approaches and operational systems (Beheshti et al., 2014; Jum'a & Bushnaq, 2024). Approximately 25% of global businesses are manufacturing SMEs (World Trade Organisation (WTO), 2020), which generate 50%–60% of the value of goods along their SC (World Bank, 2020). Beyond their primary goal of creating value utility, manufacturing SMEs contribute to fostering innovations, income generation, employment creation and industrial development. In the context of Tanzania, where this study was conducted, manufacturing SMEs make up about 14% of enterprises and employ 7.1% of the country's workforce (United Nations (UN), 2020). The sector's share of the gross domestic product (GDP) is estimated at 8% (United Nations (UN), 2020). Considering their role in the economy, the government of Tanzania has enforced various measures to strengthen the operations and sustainability of manufacturing SMEs.

Among the initiatives, the Small Industries Development Organization (SIDO) and the Tanzania Chamber of Commerce, Industry and Agriculture (TCCIA) provide strategic frameworks for SME development through improved access to finance, technical assistance, capacity building, strategic partnerships

CONTACT Baraka Israel isbara03@gmail.com Department of Procurement and Supplies Management, College of Business Education, Post Box 3810, Mbeya, United Republic of Tanzania.
© 2024 The Author(s). Published by Informa UK Limited, trading as Taylor & Francis Group
This is an Open Access article distributed under the terms of the Creative Commons Attribution License (http://creativecommons.org/licenses/by/4.0/), which permits unrestricted use, distribution, and reproduction in any medium, provided the original work is properly cited. The terms on which this article has been published allow the posting of the Accepted Manuscript in a repository by the author(s) or with their consent.

and market access facilitation (Kumburu et al., 2021; Nzumbi & Misungwi, 2019). Additionally, industrial parks and special economic zones, such as export processing zones (EPZs), provide SMEs with access to essential infrastructure, fostering innovation, sustainable manufacturing and export activities (Wu et al., 2020). Despite these initiatives, manufacturing SMEs encounter several challenges that adversely affect their operational performance, growth and financial sustainability (NBS, 2020; Sundram et al., 2018; UN, 2020). A survey by the World Bank (2020) reveals that only 40% of manufacturing SMEs are financially stable in managing and meeting their financial liabilities. Consequently, the remaining 60% face financial crises and are unable to meet their financial obligations, often experiencing a decline within six months of establishment. Besides, the sector's growth rate is unimpressive, with an annual growth rate of 3%, which is significantly lower than the 11% annual growth rate of large corporations (National Bureau of Statistics (NBS), 2020). These deficiencies result in job losses, economic stagnation, and persistent poverty.

Literature connects the operational and financial deficiencies of manufacturing SMEs to several dynamic forces. Empirical studies by Fekpe and Delaporte (2019), Hamisi (2011), and Lelo and Israel (2024) identify the inability to access, retain and satisfy potential customers as a major constraints to achieving sustainable economic growth and financial stability for manufacturing SMEs. Moreover, dynamic market forces, demand volatility, limited access to lucrative markets and high operational expenses exacerbate the financial and operational challenges faced by manufacturing SMEs (Asare et al., 2023; García et al., 2021; Qiao & Zhao, 2023, Madatta & Chen, 2020). Considering these complexities, businesses across the globe have been transitioning from traditional to modern integrated business operation systems (Holopainen et al., 2022; Usai et al., 2021). This integration has necessitated firms to invest in information and communication technology (ICT) as an essential enabler to facilitate SC integration, optimize operations, maintain a competitive position and improve financial performance. This study is motivated by these spectacular advancements, aiming to assess whether investing in ICT capabilities can help manufacturing SMEs achieve tangible financial outcomes through SC integration, using the framework of dynamic capability (DC) theory.

According to the DC theory, firms can demonstrate strong competitiveness and higher performance in volatile markets when they possess and explore inimitable, rare, and valuable capabilities (Teece et al., 1997). Owing to this, studies reveals that investing in ICT, coupled with core abilities to use computer-based systems and applications to capture, manage, exchange and collaborate along SC, has the potential to enhance firms' financial performance (FPF) (Bakan & Sekkeli, 2017; Chen et al., 2015). Such capabilities optimize the flow of funds, information and goods while meeting customers' needs on time and cost-effectively. Besides, the abilities to adopt and use computer-based tools, applications, and systems such as vendor-managed inventory (VMI), enterprise resource planning (ERP), materials resource planning (MRP), and electronic data interchange (EDI) are essential for effective management of both inter-firm and intra-firm SC flows. Effective use of these tools, applications and systems enables firms to address traditional challenges of SC such as high operational costs, delivery delays and lack of transparency whilst enhancing long-term relationships among SC partners (Holopainen et al., 2022; Jardak & Hamad, 2022). Concurrently, a study by Chin et al. (2012) reveals that using ICT tools and applications in business transactions can help firms cut SC operational costs by up to 40%.

Despite the perceived benefits of ICT capabilities, however, some empirical evidence asserts that merely investing in ICT does not automatically translate into superior FPF (Kyagante et al., 2024; Hussein & Song, 2024; Sundram et al., 2018; Usai et al., 2021). The findings of these studies suggest that firms' FPF is not merely a result of ICT capabilities but rather how effectively firms utilize ICT capabilities to leverage SC integration and innovation. This highlights the necessity to examine the role of internal SC integration (ISI) and external SC integration (ESI) as potential mediators of the relationship between ICT capabilities and firms' FPF. Essentially, ISI and ESI, enabled by ICT capabilities, can help firms streamline SC processes by facilitating real-time information sharing, automating processes and enhancing coordination among SC partners such as suppliers and customers (Chiang & Huang, 2021; Hu et al., 2023; Irfan & Wang, 2019). According to Song et al. (2016) and Hendijani and Norouzi (2023), such integrations lead to better inventory management, collaborative planning and enhanced operational inefficiencies, such as shorter lead times and cost savings. This results in more accurate demand forecasting, enhanced supplier reliability, increased customer satisfaction, and improved market responsiveness and agility.

Hence, ISI and ESI are regarded as key enablers for converting ICT capabilities into tangible financial benefits, such as increased revenue, cost savings, and improved profitability. This is attributed to better inventory management, enhanced customer satisfaction, reliable supplies, collaborative decision-making, and the risk-sharing benefits of ISI and ESI. More importantly, it should be noted that building ISI and ESI requires competent and skilled IT personnel, streamlined IT infrastructure and an innovative culture (Fekpe & Delaporte, 2019; Rai et al., 2006). For example, the use of collaboration systems, tools and applications such as supplier relationship management (SRM) or customer relationship management (CRM), VMI, ERP and EDI require adequately skilled IT personnel, proficiency in data analytics and robust ICT infrastructure, including physical devices, software and internet services. With comprehensive ICT capabilities, firms can optimize and improve ISI and ESI processes through digital tools, platforms, and applications, which are integral for nurturing a firm's operational and FPF (Rajala & Hautala-Kankaanpää, 2023; Sousa-Zomer et al., 2020).

Essentially, there exist limited studies that examine the combined effect of ICT capabilities and SC integration on the sustainable financial performance (FPF) of disadvantaged manufacturing SMEs, particularly in emerging economies like Tanzania. Much of the available studies in this context focus solely on the direct impact of ICT capabilities (Chen et al., 2015; Hautala-Kankaanpää, 2022; Nasiri et al., 2022; Rai et al., 2006) and SC integration (Fekpe & Delaporte, 2019; Ferraris et al., 2019; Jum'a & Bushnaq, 2024) on firms' operational and FPF. These studies, however, report contradictory results in this research domain. While Rai et al. (2006), Novais et al. (2020), and Jum'a and Bushnaq (2024) report significant positive effects of ICT and SC integration on firms' FPF, Usai et al. (2021) and Beheshti et al. (2014) reveal insignificant influences of ICT and SC integration on FPF. Few studies in developed economies examine the effect of ICT capabilities on firms' FPF through the mediation analysis of SC integration (Hu et al., 2023; Kyagante et al., 2024; Sundram et al., 2018), predominantly focusing on large and non-manufacturing enterprises. Unlike previous studies, this research uniquely examines the combined effect of ICT capabilities and SC integration (ISI and ESI) on firms' FPF. The study dives deeper, investigating the mediating effect of ISI and ESI in the link between ICT capabilities and firms' FPF in the context of Tanzanian manufacturing SMEs, a developing economy.

The contribution of this study is threefold. Firstly, it adds to the broader body of knowledge in supply chain management, ICT, and firms' performance by highlighting the interaction effect of ICT capabilities, SC integration, and FPF of disadvantaged Tanzanian manufacturing SMEs, an emerging economy. It contributes to the ongoing debate and academic understanding of how ICT capabilities can drive ISI, ESI, and the FPF of SMEs, providing a basis for future studies to explore similar dynamics in other emerging economies. Secondly, the study extends DC theory (Teece et al., 1997) by integrating the constructs of ICT capabilities and SC integration, testing its relevance in influencing the FPF of disadvantaged manufacturing SMEs in emerging economies, the approach that has been overlooked in previous studies. Lastly, policymakers, SME managers, and industry stakeholders can use the study's insights to design actionable policies, prioritize resource allocation, and make informed decisions about investing in ICT capabilities for SC integration to boost SMEs' FPF. For the purpose of this study, manufacturing SMEs are defined based on Tanzania's SMEs development policy. According to the policy, SMEs are enterprises engaged in production activities and employing between 1 and 99 employees (United Republic of Tanzania (URT), 2003).

2. Theoretical literature and hypothesis development

2.1. The dynamic capability (DC) theory

We employ dynamic capability (DC) theory to examine how manufacturing SMEs can leverage ICT capabilities to foster SC integration and achieve sustainable FPF. DC theory was proposed by Teece in the 1990s to explain how firms can achieve superior performance and sustain themselves in competitive business environments. The theory suggests that firms can achieve a competitive position and achieve superior performance by dynamically reconfiguring, renewing, and integrating their internal and external capabilities and resources (Teece, 2016). It considers both internal and external resources and capabilities as the basis

for firms' long-term success and improved competitive advantage (Lütjen et al., 2019). Such resources and capabilities, whether internal or external, include, but are not limited to brand reputation, technological capabilities, soft skills, and human and capital resources (Barney, 2001; Khattak et al., 2022). Based on the theoretical propositions of DC, the current study interprets ICT capabilities as valuable firm's internal resources essential for attaining competitive advantages and superior FPF. We analyse how ICT can be applied to access external resources and capabilities, reconfigure them with internal ones through ISI and ESI, and its subsequent impact on the FPF of manufacturing SMEs. Similar to Hautala-Kankaanpää (2022) and Khin and Ho (2020), this study regards skilled ICT personnel, proficiency in data analytics and robust ICT infrastructure as essential capabilities for optimizing ISI and ESI. These capabilities facilitate real-time information sharing, automate SC processes, and improve coordination with suppliers and customers. We hypothesize that the effective use of ICT can enable manufacturing SMEs to reconfigure their internal and external resources through SC integration, streamline their operations and enhance their FPF.

2.2. Hypothesis development

2.2.1. ICT capabilities and firms' financial performance

ICT capabilities entail a range of a firm's technological infrastructure, tools and individual technical know-how that enable firms to streamline operations and sustain themselves in digital environments (Fonseca & Picoto, 2020; Khin & Ho, 2020). It includes the ability to interact and manage the exchange of information using computer-based devices, software and applications. Aligned with the assumptions of the DC theory, studies reveal that ICT capabilities serve as the basis for enhanced firms' innovative practices, operational efficiency, and financial sustainability (Nasiri et al., 2022; Sousa-Zomer et al., 2020; Wang, 2020). With effective ICT-related skills, tools and infrastructure, firms can develop cost-effective SC processes, structures, products and marketing strategies which enhance firms' FPF. For example, undertaking digital marketing, one of the most cost-effective marketing strategies in the 21st century (Foroudi et al., 2017; Zhu et al., 2022), hinges on the efficacy of ICT capabilities. Besides, the use of technology-based tools like EDI, ERP, and VMI helps firms automate routine tasks, whilst bolstering FPF through improved operational efficiency and minimising transportation and inventory holding costs (Nasiri et al., 2022; Rajala & Hautala-Kankaanpää, 2023). However, their adoption requires streamlined internet services, strong servers, applications, hardware and technical skills (Al-Busaidi & Al-Muharrami, 2021; Azam, 2015). From the theoretical perspective of DC theory, it can be argued that streamlined ICT capabilities enhance the efficient flow of goods, funds and information along the firm's SC. They facilitate productivity gains and cost savings while meeting customer demand on time and at a cost-effective rate, which are essential drivers of firms' FPF (Fekpe & Delaporte, 2019; Mwenda et al., 2023). Based on these empirical views, we hypothesise that:

H1. ICT capabilities positively influence firms' FPF

2.2.2. ICT capabilities and SC integration

The extent to which firms can effectively integrate their SC operations, either internal or external is contingent upon their ICT capabilities (Kyagante et al., 2024; Sundram et al., 2018). ISI pertains to the alignment and synchronization of intra-organizational processes and functions, from procurement and production to distribution. ESI, on the other hand, involves the integration of processes and information with external partners such as suppliers and customers. Previous studies have reported a positive and significant role of ICT capabilities in supporting both ISI and ESI (Bakan & Sekkeli, 2017; Chen et al., 2015; Zhu et al., 2022). Based on the DC theory, ICT capabilities act as an enabler, providing technological infrastructure and tools like ERP necessary to streamline coordination, collaboration and information sharing among various stakeholders across the SC network. It has been argued that firms with strong ICT infrastructure, technical skills and applications perform profound synchronization of internal functions and deeper connections with customers and suppliers (Al-Busaidi & Al-Muharrami, 2021; Fekpe & Delaporte, 2019; Khattak et al., 2022). This, in turn, fosters long-term relationships among SC partners, which are essential aspects of SC integration. In addition, ICT-enabled capabilities foster digital activities, joint problem-solving, data-driven decision-making

and EDI within and across organizational boundaries, all of which are integral to ISI and ESI. Based on these empirical insights, we formulate the hypothesis that:

H2. ICT-enabled capabilities positively influence ISI

H3. ICT-enabled capabilities positively influence ESI

2.2.3. SC integration and firms' financial performance

In a dynamic and competitive business landscape where businesses are becoming automated, integrating a firm's SC activities is crucial to achieving operational and financial sustainability (Jardak & Hamad, 2022; Rai et al., 2006). SC integration refers to the degree to which a firm's internal and external partners jointly plan, collaborate and monitor the flows of information, funds and materials using the internet and computer-based systems. The empirical literature has revealed a positive and significant relationship between SC integration and firms' operational and financial performance (Fekpe & Delaporte, 2019; Nasiri et al., 2022; North et al., 2020). Building on the DC theory, a firm's ability to integrate its operations, either through ISI or ESI, promotes joint planning, data monitoring, and problem-solving, thereby optimizing efficient product development, distribution, and cash flow. For example, ERP and CRM based on ISI help firms improve demand planning, forecasting and order replenishment for critical SC activities (Rajala & Hautala-Kankaanpää, 2023; Song et al., 2016; Yu et al., 2023). ESI systems such as SRM and VMI help firms share inventory information with suppliers, emphasizing just- in-time deliveries, thus minimizing inventory costs and cycle time (Israel, 2022). Additionally, enhanced relationships with suppliers help firms procure raw materials cost-effectively, which, according to Hendijani and Norouzi (2023) and Yu et al. (2021), are important drivers of firms' FPF. Drawing on DC theory, it is theorized that ISI and ESI can help firms create bonds and long-term loyalty with suppliers, retain potential customers, minimize operational costs, and generate high sales revenues and profit margin. Based on the analysed importance of integrated SC capabilities, we hypothesize that:

H4. ISI positively influence firms' FPF.

H5. ESI positively influence firms' FPF.

2.2.4. The mediating role of SC integration

In today's dynamic and competitive business environment, firms recognize the importance of SC integration, both ISI and ESI, as potent drivers that maximize their operational efficiency and financial outcomes (Hussein & Song, 2024; Qiao & Zhao, 2023; Yu et al., 2021). However, it should be noted that the successful integration of a firm's internal and external SC operations is contingent on ICT capabilities. Similar to theoretical assumptions of DC theory, studies suggest that ICT capabilities, supported by streamlined internet services, tools, software and skilled personnel, provide platforms that facilitate the integration of internal and external SC processes (Bag et al., 2021; Zhu et al., 2022). For instance, the use of ICT tools such as ERP, VMI and manufacturing execution systems (MES) makes the integration of procurement, production and distribution of products much easier through enhanced operational efficiency and visibility. Similarly, EDI, SRM and CRM software enable firms to share information, coordinate activities and synchronize SC processes with external stakeholders efficiently. Such efficiency and visibility, according to Lelo and Israel (2024) and Rajala and Hautala-Kankaanpää (2023), lead to greater responsiveness to customer and market demand, reduced operational costs, shorter lead times, improved productivity and increased customer satisfaction. These metrics, in turn, translate into a firm's FPF through increased sales, market share and profitability. In addition, enhanced ISI and ESI capabilities foster SC resilience and reduce risk, which, from the perspective of DC theory, are deemed essential for maintaining firms' financial sustainability (Chiang & Huang, 2021; Jum'a & Bushnaq, 2024. These empirical views provide sufficient evidence to theorize that both ISI and ESI act as mediators between ICT capabilities and firm FPF. They enhance a firm's visibility, operational efficiency, and customer satisfaction, which collectively translate into FPF. Subsequently, we hypothesize that:

H4. ISI mediates the effect of ICT on firms' FPF.

H5. ESI mediates the effect on ICT on firms' FPF.

2.5. The conceptual framework

Figure 1 presents the conceptual model for this study, demonstrating the hypothesized relationships between ICT capabilities, SC integration (ISI and ESI), and firms' FPF. The conceptual model has been developed based on the literature review and the formulated research hypotheses. The model proposes that ICT capabilities are foundational for both internal and external SC integration. This is attributed to the fact that effective ICT capabilities enhance coordination, information sharing and process integration within the firm (ISI) and with external partners (ESI). This integration, in turn, leads to improved FPF by streamlining operations, thereby reducing operational costs and increasing sales revenue, sales and profit margin.

3. Methodology

3.1. Research design and study area

This study employed a cross-sectional research design and a quantitative research approach. A quantitative research approach is appropriate when a study is informed by research hypotheses and aims to establish statistical links that require empirical testing using numerical data (Dominowski, 1980). A cross-sectional research design, on the other hand, is used when researchers aim to collect data and draw inferences about a population or phenomenon at a particular point in time (Saunders et al., 2019). Data for the study was collected from the targeted population at a single point in time, hence justifying the use of a cross-sectional research design. Using a cross-sectional research design, the authors collected quantitative data and tested hypotheses regarding the mediating role of SC integration in the relationship between ICT capabilities and FPF of manufacturing SMEs at a single point in time. The study was conducted in the Mbeya region of Tanzania. The region was selected for the study because it has been identified as one of the five Tanzanian regions with a substantial number of SMEs, hosting about 2,852 manufacturing SMEs operating across various sectors of the economy (UN, 2020). These include micro enterprises (1,821), small-sized enterprises (753), and medium-sized enterprises (278). Based on this, conducting the study in the Mbeya region provided better access to data sources from different types of SMEs with varied level of ICT capabilities, SC integration system, and FPF.

3.2. Measures

The measurement items for this survey-based study were adapted from measurement scales that have been used and validated in prior related studies. However, the adapted items were modified to fit the study context, to examine the mediating effect of SC integration in the relationship between ICT capabilities and FPF within the context of manufacturing SMEs in Tanzania. The full measurement items for each construct, along with their modifications are detailed in Table 1. In particular, the construct for the independent variable (ICT capabilities) was assessed using four validated measurement scales adapted from Turulja and Bajgorić (2015), Nwankpa and Roumani (2016), and Awamleh and Ertugan (2021). The mediator variables (ISI and ESI) were evaluated using five validated measurement scales each, adapted from Irfan and Wang (2019), Nayal et al. (2022), Abdallah et al. (2021), Chiang and Huang (2021), and

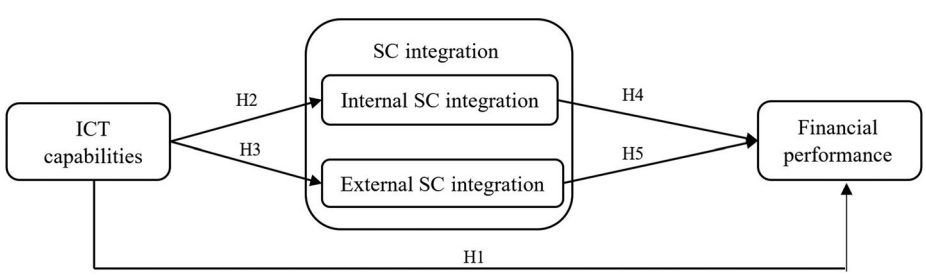

Figure 1. Proposed research model and hypotheses. Source(s): Author's compilation.

Table 1. Constructs and measurement items.

Constructs and items	References
ICT-enabled capabilities (ICT)	
Ict1. ICT knowledge and usage skills	Turulja and Bajgorić (2015), Nwankpa and Roumani, (2016), Awamleh and Ertugan (2021)
Ict2. ICT infrastructure – hardware, software and networks	
Ict3. Degree of integration of ICT systems and solutions throughout the organization	
Ict4. ICT's proactive stance in anticipating and preventing potential risks	
Internal SC integration (ISI)	
Isi1. Degree of collaboration between different departments within the organization	
Isi2. Use of integrated ERP systems for managing internal processes	Irfan and Wang (2019), Nayal et al. (2022), Abdallah et al. (2021).
Isi3. Adoption of integrated inventory management	
Isi4. Real-time data-sharing practices among internal stakeholders	
Isi5. Use of cross-functional teams in process improvement	
External SC Integration (ESI)	
Esi1. Creating linkage with suppliers and customers through IoT or EDI	
Esi2. Aligned performance indicators with external partners	Abdallah et al. (2021), Chiang and Huang (2021), Patil et al. (2023).
Esi3. Real-time information sharing for making common demand forecast	
Esi4. Establishing strategic partnerships and alliances with external partners	
Esi5. Working with external partners to improve the inter-organizational process	
Financial performance (FPF)	
Fpf1. Satisfaction with growth in sales	
Fpf2. Growth in return on investment (ROI)	Novais et al. (2020), Bag et al. (2021)
Fpf3. Improved net profit margin	
Fpf4. Satisfaction with growth in market share	
Fpf5. Decreased production and logistics cost	

Source(s): Table by authors.

Patil et al. (2023). Proxy measures of firms' FPF from Novais et al. (2020) and Bag et al. (2021) were adapted to evaluate the study's outcome variable. Each item of the construct was evaluated using a 5-point Likert scale ranging from 1 (strongly disagree) to 5 (strongly agree). Essentially, the adapted and modified measurement items of the questionnaire were reviewed by five independent SC practitioners, ICT and financial experts to assess its appropriateness and completeness. Changes were made to the final draft of the questionnaire based on the experts' comments before it was sent to respondents for data collection.

3.3. Sampling and data collection

The population of interest for this study were 2852 manufacturing SMEs from the study area. The complete list of manufacturing SMEs was obtained from the small industries development organization (SIDO), an authority responsible for promoting and supporting the business environment for SMEs across the region. Slovin's formula (see Equation 1) was used to determine the initial sample size of 351. This formula allows for precise sample size determination at specified confidence levels and margin of error (Yamane, 1973). To account for the diversity and representation of SMEs based on their sizes, a stratified random sampling technique was employed. In essence, SMEs were categorized into three strata: micro enterprises, small-sized enterprises, and medium-sized enterprises. The initial sample size was allocated proportionally to each stratum. Subsequently, a simple random sampling technique was used to select SME managers or representatives from each stratum as the units of observation. SME managers or representatives were chosen as units of observation because of their crucial role in planning and approving the adoption of ICT technologies, SC integration, and evaluating firms' FPF (Heredia et al., 2022; North et al., 2020).

$$n = \frac{N}{1+N(e)^2} = \frac{2852}{1+1238\,(0.05)^2} = 351 \tag{1}$$

Where: n is the estimated sample size, N population under study, and e signifies the margin error estimated at a 95% confidence interval. A set of self-administered questionnaires containing structured questions was used to collect primary quantitative data and test the relevance of DC theory in examining the mediating role of SC integration in the link between ICT capabilities and firms' FPF. Initially, 351 questionnaires were physically distributed to SME owners in the Mbeya region, who had first-hand knowledge of ICT-enabled SC capabilities and firms' FPF, using a drop-off and pick-up later approach.

However, due to non-responses, only 274 questionnaires, equivalent to a 71.4% response rate, were returned and found useful for the final analysis. Data collection lasted for a period of three months, spanning from February to April 2024. We preferred the use of structured questionnaires because of their advantages in minimizing biases in data collection while covering a large number of respondents in a short time (Saunders et al., 2019).

3.4. Validity and reliability assessment

Confirmatory factor analysis (CFA) was performed using analysis of moment structures (AMOS 23.0) software to assess the dimensionality, validity and reliability of the constructs. Cronbach's alpha and composite reliability (CR) were used to assess the internal consistency of the measurement scales, which require a minimum value of ≥ 0.70 for each scale to be considered acceptable (Hair et al., 2020). The results of the CFA in Table 2 show values above 0.70 for both Cronbach's alpha and CR for each construct, implying that all items have good internal consistency and reliability (Hair et al., 2020). Moreover, for each item and construct, the factor loadings and average variance extracted (AVE) demonstrated values exceeding the recommended minimum threshold of 0.50, thus reflecting satisfactory convergent validity (Fornell & Larcker, 1981). For discriminant validity, we assessed the correlations among latent variables using the square roots of AVE. Discriminant validity was confirmed, as the results in Table 3 indicate that the square root of AVEs for all constructs is higher than the corresponding inter-correlation values in the model (Fornell & Larcker, 1981). Additionally, the maximum shared variance (MSV) for each construct was less than the respective AVE values and higher than the average shared squared variance (ASV), which further signifies the attainment of discriminant validity (Hair et al., 2020). Correspondingly, the highest value of the variance inflation factor (VIF) was 3.158, which is below the cut-off value of 5.0, indicating that there is no issue of multicollinearity.

Table 2. Factor loadings and reliability values of measurement items.

Constructs and items	VIF	Factor loadings	Cronbach's alpha	CR	AVE
ICT-enabled capabilities (ICT)			0.812	0.890	0.671
Ict1	2.963	0.711			
Ict2	1.524	0.773			
Ict3	1.983	0.878			
Ict4	2.765	0.901			
Internal SC integration (ISI)			0.854	0.920	0.697
Isi1	3.017	0.797			
Isi2	1.586	0.830			
Isi3	2.755	0.885			
Isi4	1.989	0.764			
Isi5	2.653	0.891			
External SC Integration (ESI)			0.737	0.911	0.675
Esi1	1.762	0.842			
Esi2	1.874	0.925			
Esi3	2.007	0.796			
Esi4	3.158	0.709			
Esi5	2.063	0.820			
Financial performance (FPF)			0.798	0.898	0.635
Fpf1	2.901	0.700			
Fpf2	1.785	0.841			
Fpf3	2.873	0.898			
Fpf4	2.754	0.747			
Fpf5	1.877	0.784			

Source(s): Table by authors.

Table 3. Discriminant validity and correlation analysis.

	CR	AVE	MSV	ASV	ESI	FPF	ICT	ISI
ESI	0.911	0.675	0.276	0.203	***0.821***			
FPF	0.896	0.635	0.276	0.169	0.525**	***0.797***		
ICT	0.890	0.671	0.288	0.153	0.309	0.276**	***0.819***	
ISI	0.920	0.697	0.288	0.227	0.487**	0.394**	0.537**	***0.835***

**$p < .01$. square root of AVE reported along diagonal in italic. Source(s): Table by Authors.

3.5. Data analysis

In this study, data analysis was carried out using the Hayes PROCESS macro model 4 to test the study hypotheses regarding the mediating effects of ISI and ESI in the relationship between ICT capabilities and firms' FPF, with 5000 bootstrapping samples at 95% confidence intervals (CIs). Hayes PROCESS is a robust and modern tool for conducting regression analysis, which can accommodate additional variables such as moderators, mediators, and covariates making use of bootstrapping confidence intervals (Hayes, 2022). It is an up-to-date and effective tool for assessing the direct, indirect and moderation effects of the specific study variables. Concurrently, this study employed two variables (ISI and ESI) as the mediators, assessing their mediating role (direct and indirect effects) in the link between ICT and FPF, hence making use of the Hayes PROCESS macro useful. Prior to this, CFA was performed to explore the underlying data structure and assess the unidimensionality of the constructs based on the structural equation modelling (SEM) measurement model. During this stage, the patterns of latent constructs and observed variables for ICT capabilities, ISI, ESI and FPF were depicted. Subsequently, the results of the CFA were used to assess the model fit indices, reliability and validity of the data based on the SEM's measurement model.

3.6. Common method variance

Considering that the data for this study was collected from a single SME manager representing each enterprise, common method variance (CMV) could be an issue of concern. To address this, the study employed Harman's single-factor test, as recommended by Podsakoff et al. (2003), to assess CMV issues. The results indicated that a single factor explained approximately 35.43% of the variance in the model. Since this value is less than 50%, it was therefore deduced that CMV was not a significant issue of concern in this study.

4. Research results

4.1. Characteristics of respondents

Table 4 presents the demographic characteristics of the respondents and firms included in this study. Males comprised a significant portion of the respondents (60.95%, $n=167$), compared to females, who accounted for 39.05% ($n=107$). Regarding age groups, 24.46% ($n=70$) of the respondents were aged 41–50 years, followed by those aged 51–60 years (20.43%, $n=56$). The smallest age group, consisting of respondents older than 60 years, comprised 17.65% ($n=47$) of the sample. In terms of educational attainment, the majority of the respondents had a first degree (32.48%, $n=89$), followed by those with a diploma (29.56%, $n=81$), and those with postgraduate qualifications (13.50%, $n=37$). Concerning the

Table 4. Characteristics of respondents and firms.

Variable	Category	Frequencies	Percentages
Gender	Male	167	60.95
	Female	107	39.05
	>20 ≤ 30 years	49	18.27
	>30 ≤ 40 years	52	19.20
Age groups	>40 ≤ 50 years	70	24.46
	>50 ≤ 60 years	56	20.43
	>60 years	47	17.65
	Secondary education	67	24.45
Level of education	Diploma	81	29.56
	First Degree	89	32.48
	Postgraduate	37	13.50
	≥1 employees ≤4 employees	144	52.55
Number of Employees	>4 ≤ 49 employees	83	30.29
	>49 ≤ 99 employees	47	17.15
	≥6 months ≤1 year	11	4.01
	>1 ≤ 5 years	43	15.69
Establishment	>5 ≤ 10 years	56	20.44
	>10 ≤ 15 years	61	22.26
	>15 ≤ 20 years	58	21.17
	>20 years	45	16.42

Source(s): Table by authors.

characteristics of the firms, statistics indicate that the majority were micro-enterprises (52.55%, $n = 144$) with 1–4 employees. Additionally, 30.29% ($n = 83$) were small enterprises with 5–49 employees, and 17.15% ($n = 47$) were medium-sized enterprises with 50–99 employees. This distribution confirms that the study mainly involved SMEs, aligning with its focus. Lastly, the statistics show that the majority of the firms in the study had been established for more than 10–15 years (22.26%, $n = 61$), followed by those established for more than 15–20 years (21.17%, $n = 58$). These statistics suggest that the respondents were sampled from experienced SMEs with adequate knowledge to effectively respond to questions related to ICT, SC integration and FPF in the context of the manufacturing sector.

4.2. Measurement model

Figure 2 is the SEM's measurement model used to assess the model fit indices and their suitability for the data. The model fit indices indicated a chi-square (χ^2) value of 618.236 with degrees of freedom (df) at 247, yielding a p-value of <.01 and a χ^2/df ratio of 2.503. Additionally, other indices demonstrated robust fit. The Goodness of Fit Index (GFI) was 0.919, the Tucker-Lewis Index (TLI) was 0.965, the Incremental Fit Index (IFI) was 0.953, the Comparative Fit Index (CFI) was 0.933, the Normed Fit Index (NFI) was 0.941, the Root Mean Square Error of Approximation (RMSEA) was 0.059, the Standardized Root Mean Square Residual (SRMR) was 0.048, and the Probability of Close Fit (PClose) was 0.278. All these values fall within the recommended thresholds, implying that the measurement model fits well with the data (Hair et al., 2020).

4.3. Structural model and hypotheses testing

4.3.1. Direct effects results

Table 5 presents the results of the direct and mediation effects of the hypothesized study variables. The R^2 values for ISI and ESI were 0.43 ($p < .01$) and 0.33 ($p < .01$), respectively, while that for FPF was 0.47

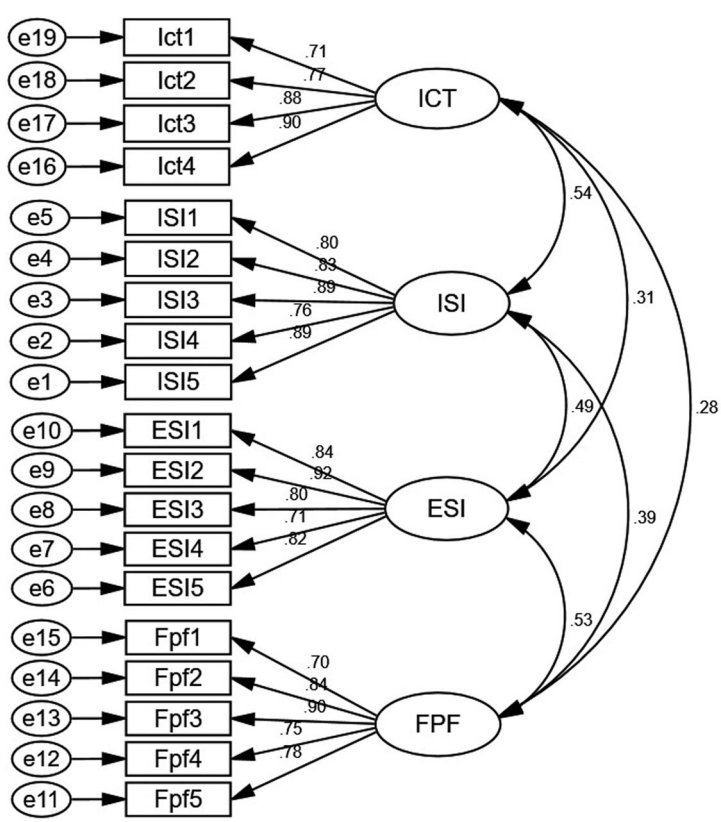

Figure 2. Measurement model. Source(s): Figure by authors.

Table 5. The direct and indirect effects of regressed variables.

Direct effects	Coefficient	se	t	*p*	LLCI	ULCI	Supported
H1. ICT → FPF	0.062	0.047	1.313	.190	−0.031	0.156	No
H2. ICT → ISI	0.501	0.051	9.876	.000	0.401	0.600	Yes
H3. ICT → ESI	0.236	0.044	5.355	.000	0.149	0.323	Yes
H4. ISI → FPF	0.130	0.053	2.462	.014	0.026	0.234	Yes
H5. ESI → FPF	0.411	0.061	6.757	.000	0.291	0.530	Yes
Mediation effects	**Effect**	**BootSE**		**BootLLCI**	**BootULCI**		
H6. ICT → ISI → FPF	0.065	0.031		.007	0.128		Yes
H7. ICT → ESI → FPF	0.097	0.023		.054	0.145		Yes

Source(s): Table by authors.

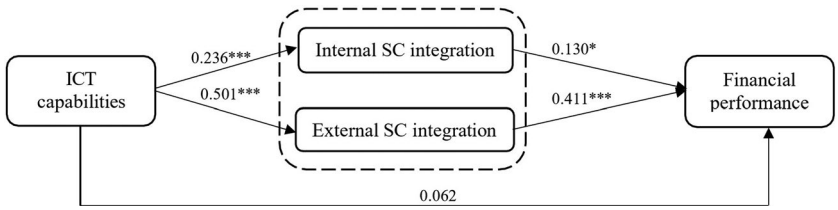

Figure 3. Structural path analysis. Note: *p<.005; ***p<.001. Source(s): Figure by authors.

($p<.01$), indicating good explanatory power of the model. Out of the seven hypotheses formulated, the study confirmed six. Specifically, the study's first hypothesis (H1), which proposed a positive relationship between ICT and FPF, was not supported as the results revealed an insignificant positive effect on FPF ($\beta=0.062$, $p>.05$). Furthermore, the analysis revealed a significant positive effect of ICT on ISI ($\beta=0.501$, $p<.01$), as well as a significant positive effect of ICT on ESI ($\beta=0.236$, $p<0.01$), thus supporting the proposed H2 and H3. Additionally, both ISI ($\beta=0.130$, $p<.05$) and ESI ($\beta=0.411$, $p<.01$) showed significant positive effects on FPF, thus providing support for H4 and H5.

4.3.2. Mediation effects results

Figure 3 and Table 5 show the results of the mediating effects of ISI and ESI on the relationship between ICT and FPF. The results confirm the significance of the mediation effects. In the bootstrapping approach, an indirect effect is considered significant if the confidence intervals, ranging from the lower level (LLCI) to the upper level (ULCI), do not include zero (Hayes, 2022). Based on this criterion, the bootstrapping results showed that ISI significantly mediates the effect of ICT on FPF ($\beta=0.065$, 95% CI [LLCI = 0.007, ULCI = 0.128]). Furthermore, the mediating effect of ESI in the relationship between ICT and FPF was also significant ($\beta=0.097$, 95% CI [LLCI = 0.054, ULCI = 0.145]). Therefore, hypotheses H6 and H7 are supported, suggesting a full mediation effect of ICT on FPF through both ISI and ESI.

5. Discussions

This study proposed seven hypotheses, of which six were supported and one was rejected. Among others, the findings did not support the first hypothesis (H1), which posited a positive relationship between ICT and FPF. This is inconsistent with previous research findings, such as those by Jardak and Hamad (2022), Nasiri et al. (2022), Nwankpa and Roumani (2016) and Rai et al. (2006), which have shown that ICT plays a crucial role in enhancing a firm's operational and FPF. In the context of this study, the insignificant effect of ICT on FPF may be attributed to the possibility that firms might invest in advanced ICT solutions but fail to integrate and align them efficiently with the firm's strategic goals and existing processes. Again, the infrastructure and technologies implemented may not be fully utilized to leverage FPF due to a lack of skills or resistance to change among practitioners. According to North et al. (2020) and Rajala and Hautala-Kankaanpää (2023), these deficiencies lead to a dilution of the impact of ICT on operational and FPF. Moreover, if all competitors adopt similar technologies, the competitive advantage

offered by ICT is likely to be neutralized, leading to an overall insignificant impact on FPF (Fonseca & Picoto, 2020; Jardak & Hamad, 2022; Nwankpa & Roumani, 2016).

The study findings supported the second research hypothesis (H2), demonstrating a significant positive effect of ICT on ISI. These findings corroborate the assumptions of DC theory and the arguments presented by Yu et al. (2021) and Kyagante et al. (2024), which emphasize that robust ICT capabilities such as advanced systems like ERP and supply chain management (SCM) software, coupled with ICT knowledge and usage skills, foster ISI by synchronizing activities across various departments, including procurement, manufacturing and distribution within an organization. Such synchronization enhances coordination and collaboration among various departments of the organization, thereby reducing bottlenecks and improving the flow of goods and information. Concurrently, similar studies by Sundram et al. (2018) and Hussein and Song (2024) suggest that ICT facilitates real-time data sharing and communication across different departments within an organization. Overall, proximity to ICT nurtures transparency of information within the organization, ensuring that all parts of the SC are aligned and informed about operations, which, according to Asare et al. (2023) and Qiao and Zhao (2023), are crucial aspects of ISI.

For the third hypothesis (H3), the study findings indicate a significant positive relationship between ICT and ESI. This result illuminates the widely held understanding that investing in ICT facilitates the integration of a firm's internal operations with external trading partners, thereby supporting the existing literature (Holopainen et al., 2022; Sundram et al., 2018; Yu et al., 2021) and the arguments behind the DC theory (Lütjen et al., 2019). Technologies such as the IoT, EDI, cloud-based systems and VMI enable real-time data sharing, and improved collaboration and communication between a firm, its customers and suppliers. These technologies allow for seamless interactions between different stakeholders across the firm's SC. In line with the findings of empirical studies (Al-Busaidi & Al-Muharrami, 2021; Bakan & Sekkeli, 2017; Yu et al., 2021) as well as the propositions of DC theory (Lütjen et al., 2019), the results of this study suggest that ICT aids in the management and synchronization of activities across the SC, fostering transparency, providing real-time sharing of information and tracking of products, which are essential drivers of ESI.

Again, the study findings support the fourth hypothesis (H4), suggesting a significant positive effect of ISI on FPF. This is consistent with prior studies conducted by Fekpe and Delaporte (2019) and Rai et al. (2006), as well as the assumptions of DC theory (Lütjen et al., 2019), which support the idea that internal capabilities, such as ICT, when interacts with ISI, can serve as a competitive advantage that leads to superior outcomes. Specifically, effective ISI fosters joint decision-making and problem-solving, enabling firms to proactively identify and manage risks that can have significant cost implications. In a similar vein, Novais et al. (2020) argued that ISI improves the flow of information and eliminates redundant processes across departments, resulting in faster production, reduced costs, and improved overall financial outcomes. Moreover, when a firm's internal activities across departments are well-coordinated, customer orders can be fulfilled more accurately and timely. This, in turn, leads to higher customer satisfaction and retention, thereby driving sales and profitability. In addition, ISI aligns procurement with real production needs, distribution schedules and sales forecasts. Such alignment leads to better inventory management and helps firms reduce excess inventory and related costs, which positively affects the firm's financial health (Irfan & Wang, 2019; Yu et al., 2021).

Furthermore, the analysis revealed a significant positive effect of ESI on FPF, supporting the fifth hypothesis (H5). The findings suggest that integrating a firm's internal operations with external trading partners such as customers and suppliers along its SC contributes to improved FPF of manufacturing SMEs. This is consistent with the conclusions drawn by Chiang and Huang (2021) and Hu et al. (2023) who noted a significant positive role of ESI in enhancing both operational and FPF. The findings extend from the assumptions of DC theory and the fact that by integrating more closely with trading partners, firms can streamline their operations, reduce duplication of efforts and enhance logistics. This integration, as also suggested by Jum'a and Bushnaq (2024) and Hendijani and Norouzi (2023), often leads to shorter lead times, lower inventory levels and reduced costs, all of which positively impact the firm's FPF directly. More importantly, effective ESI fosters a collaborative environment where trading partners can work together to solve problems, innovate and improve product designs, services and solutions that appeal to end customers. This collaboration can serve as a significant competitive advantage, enabling

firms to adjust their strategies and operations promptly, thereby attracting and retaining potential customers and reliable suppliers for sustainable FPF (Qiao & Zhao, 2023; Sundram et al., 2018)

Given that the first hypothesis (H1), which proposes a positive direct effect of ICT on FPF, was not supported, the significant findings for the sixth and seventh hypotheses (H6 and H7) indicate that both ISI and ESI fully mediate the effect of ICT on FPF. Similar to empirical studies (Asare et al., 2023; Hu et al., 2023), these findings suggest that ISI and ESI are strategic pathways through which ICT can impact a firm's FPF. For business firms, these results imply that investing in technology alone is not sufficient to enhance FPF; rather, firms must also focus on leveraging ICT to enhance ISI and ESI. Essentially, ICT provides necessary tools and platforms such as CRM, ERP, SMR and VMI for firms to communicate and collaborate with internal and external entities like suppliers and customers. This coordination enables better forecasting, planning and resource allocation, which are crucial for improving FPF through reduced costs and enhanced sales (Rajala & Hautala-Kankaanpää, 2023; Song et al., 2016; Zhu et al., 2022). When enhanced by ICT, ISI and ESI enable firms to respond more swiftly to market changes and customer demands, which, according to the assumptions of DC theory (Lütjen et al., 2019; Teece, 2016), are crucial in maintaining a competitive advantage and improving outcomes. Moreover, when ICT is combined with ISI and ESI, firms can achieve more competitive pricing, better quality of inputs, and timely deliveries, all of which contribute to FPF (Jum'a & Bushnaq, 2024; Kyagante et al., 2024). Based on the theoretical perspective of DC theory, the findings of this study suggest that firms with high levels of ICT capabilities, effectively embedded into both ISI and ESI, tend to perform better compared to those that have not aligned these capabilities effectively.

6. Conclusion, implications and direction for further studies

6.1. Conclusion

The research findings provide a nuanced understanding of the impact of ICT on FPF, underscoring the pivotal role of ISI and ESI. Although the findings reveal an insignificant direct influence of ICT capabilities on FPF, these capabilities demonstrate a significant positive effect on both ISI and ESI, which in turn substantially improve FPF. These indirect effects suggest that the value derived from ICT investments in firms materializes through the optimization of SC processes and the enhanced coordination between the firm and its external partners. The full mediation effects of ISI and ESI indicate that the strategic use of ICT is not merely a tool for direct FPF, but serves as a critical enabler of synergistic interactions within and beyond the firm's borders. These findings imply that firms should not evaluate the utility of ICT solely through the lens of direct financial outcomes, but should consider the broader operational improvements that ICT can facilitate. By focusing on strengthening ISI and ESI, firms can leverage ICT as a powerful catalyst for achieving superior FPF. This highlights the importance of a strategic approach to ICT investment, emphasizing integration and collaboration across all segments of the SC to unlock the full potential of digital technologies in driving FPF.

6.2. Theoretical implications

The findings of this study can be interpreted within the DC framework, where ICT capabilities enable firms to reconfigure their internal and external competencies through SC integration to achieve financial success. The lack of a direct significant effect of ICT capabilities on FPF in the surveyed firms challenges the traditional view that ICT investments directly enhance financial outcomes (Al-Busaidi & Al-Muharrami, 2021; Nasiri et al., 2022). Instead, the significant mediating role of both ISI and ESI highlights the importance of these processes as critical pathways through which ICT impacts FPF. According to DC theory, it is this reconfiguration, rather than the capabilities themselves, that drives performance improvements (Teece, 2016). From this theoretical perspective, the findings suggest that while investing in ICT alone might not directly enhance FPF, their value is realized when leveraged to enhance firms' capabilities such as ISI and ESI. This underscores the need to revisit and refine theories related to ICT value propositions, focusing on indirect pathways such as ISI and ESI rather than direct financial impacts. These findings stimulate a theoretical understanding of how ICT influences firms' processes and performance through enhanced coordination and collaboration. Each of these theoretical implications contributes to academic

discourse (Yu et al., 2021; Rai et al., 2006; Sundram et al., 2018), encouraging firms to rethink how they invest in and manage ICT to optimize FPF through enhanced SC integration processes.

6.3. Managerial implications

The findings of this study offer strategic and operational insights essential for guiding managerial decisions regarding ICT investment, SC integration, and firms' FPF. Given the full mediation effect of ISI and ESI in the link between ICT and FPF, SME industrial managers should view ICT capabilities as enabling tools rather than standalone solutions or direct contributors to FPF. Accordingly, the study recommends integrating ICT with the SC processes of manufacturing SMEs to enhance their FPF. This can be achieved by investing in ICT infrastructure, designing, and adopting technological solutions like ERP, VMI, EDI, CRM, and SRM to streamline internal operations and facilitate better coordination with suppliers and customers. In addition, ICT personnel should be involved in the firm's strategic planning and decision-making, ensuring their commitment aligns with strategic business goals to support the adoption and implementation of real-time data sharing systems and technological solutions for better SC integration and FPF. Besides, manufacturing SMEs should develop metrics and key performance indicators specifically to measure the effectiveness of ICT in enhancing SC integration and FPF. This enables continuous monitoring of ICT's impact on SC integration processes and, consequently, on FPF

To the government, the study recommends the need to infuse platforms that support the adoption of ICT and the integration of SC processes across manufacturing SMEs. This can include, but is not limited to establishing innovation hubs, technology centre, and fostering inter-firm and cross-functional collaboration. This approach can help promote technological adaptations and collaborative SC among manufacturing SMEs, suppliers, and customers to ensure smooth implementation and buy-in. It can lead to more effective adoption of ICT solutions, tailoring ICT capabilities to SC needs, and enhancing both ISI and ESI. More importantly, the government should organize regular training and capacity-building programs to provide technical support and consulting services to SMEs on how to select appropriate ICT solutions and integrate them with SC processes, along with understanding their associated benefits. This can be complemented by offering grants, subsidies, or low-interest loans to industrial SMEs for investing in ICT infrastructure and SC integration initiatives.

6.4. Limitations and suggestions for further studies

This section highlights study limitations and suggestions for further studies. Firstly, the study employed a cross-sectional research design, which involved capturing and analysing data on the study variables at a single point in time. This design limits the ability to infer causality between ICT capabilities, SC integration and FPF. Given this limitation, a longitudinal-based research design is required to provide a more robust understanding of these relationships over time. Besides, studies should consider developing and utilizing technological maturity models to assess how varying levels of ICT capabilities affect the dynamics between SC integration and FPF. Second, the study's sample was limited to manufacturing SMEs in the Mbeya region of Tanzania. This affects the generalizability of findings across different sectors or regions where ICT capabilities and SC integration vary. Therefore, conducting studies across various industries and geographic regions could provide valuable insights and help verify the generalizability of the findings. Lastly, while the study indicates full mediation effects of ISI and ESI, other potential variables such as organizational agility, market condition, firm size and innovation, which may predict or moderate the impact of ICT capabilities on FPF, were not controlled. As such, future studies should consider the potential mediating or moderating role of these factors in the relationship between ICT capabilities and FPF.

Ethical statement

Informed consent was obtained from all participants prior to their involvement in the study. Participants were provided with a written consent form detailing the purpose of the research, the procedures involved, potential risks and benefits, confidentiality measures, and their rights as participants. They were assured that their participation was voluntary and that they were free to withdraw from the study at any time without consequence. Besides, the study was conducted in accordance with the procedures stipulated in the College of Business Education's Research and Publication Policy of 2018, and the protocol was approved by the College's Research and Publication Committee (RPC).

Authors contributions

Veneranda Rutainurwa: Conception, design, data collection, analysis, validation, interpretation of the data, writing original draft and review.

Beny Mwenda: Conception, validation, design, data collection, interpretation of the data, writing original draft and review.

Baraka Israel: conception, design, validation, data collection, analysis, writing original draft and review.

Disclosure statement

No potential conflict of interest was reported by the author(s).

Funding

The authors acknowledge the full financial support for this study from the College of Business Education (CBE).

About the authors

Veneranda Rutainurwa is a lecturer in the Department of Accountancy and Marketing at the Mbeya Campus of the College of Business Education, Tanzania. Her research interests include Artificial Intelligence, Machine Learning, Smart Farming, and the Internet of Things.

Beny Mwenda is a lecturer in the Department of Accountancy and Marketing at the College of Business Education, Mbeya Campus in Tanzania. His areas of expertise include Finance, Accounting, Taxation, Financial Markets, Banking, and Investment Analysis.

Baraka Israel is associated with the Department of Procurement and Supplies Management at the College of Business Education, based at Mbeya Campus in Tanzania. His research interests include Supply Chain Management, Logistics Management, Sustainable Public Procurement, Procurement Contract Management, and Strategic Procurement Management.

ORCID

Baraka Israel http://orcid.org/0000-0002-4969-3202

Data availability statement

The data that support the findings of this study are available from the corresponding author upon reasonable request.

References

Abdallah, A. B., Rawadiah, O. M., Al-Byati, W., & Alhyari, S. (2021). Supply chain integration and export performance: the mediating role of supply chain performance. *International Journal of Productivity and Performance Management*, *70*(7), 1907–1929. https://doi.org/10.1108/IJPPM-02-2021-0076

Al-Busaidi, K. A., & Al-Muharrami, S. (2021). Beyond profitability: ICT investments and financial institutions performance measures in developing economies. *Journal of Enterprise Information Management*, *34*(3), 900–921. https://doi.org/10.1108/JEIM-09-2019-0250

Asare, B., Nuertey, D., & Poku, E. (2023). Innovation-oriented supply chain integration for structural flexibility and strategic business performance. *Benchmarking*: *An International Journal*. https://doi.org/10.1108/BIJ-10-2022-0626

Awamleh, F., & Ertugan, A. (2021). The relationship between information technology capabilities, organizational Intelligence, and competitive advantage. *SAGE Open*, *11*(2), 1–14. https://doi.org/10.1177/21582440211015201

Azam, M. S. (2015). Diffusion of ICT and SME performance, E-services adoption: Processes by firms in developing nations. Advances in *business marketing and purchasing* (vol. 23A, pp. 7-290). Leeds: Emerald Group Publishing Limited. https://doi.org/10.1108/S1069-09642015000002300.

Bag, S., Gupta, S., Kumar, S., & Sivarajah, U. (2021). Role of technological dimensions of green supply chain management practices on firm performance. *Journal of Enterprise Information Management*, *34*(1), 1–27. https://doi.org/10.1108/JEIM-10-2019-0324

Bakan, I., & Sekkeli, Z. H. (2017). Types of information technology capability and their impacts on competitiveness. *Research Journal of Business and Management*, *4*(2), 201–210.

Barney, J. B. (2001). Is a resource-based view a useful perspective for strategic management research. *Academy of Management Review*, *26*(1), 101–113.

Beheshti, H., Oghazi, P., Mostaghel, R., & Hultman, M. (2014). Supply chain integration and firm performance: an empirical study of Swedish manufacturing firms. *Competitiveness Review*, *24*(1), 20–31. https://doi.org/10.1108/CR-06-2013-0060

Chen, Y., Wang, Y., Nevo, S., Benitez-Amado, J., & Kou, G. (2015). IT capabilities and product innovation performance: The roles of corporate entrepreneurship and competitive intensity. *Information & Management*, *52*(6), 643–657. https://doi.org/10.1016/j.im.2015.05.003

Chiang, A.-H., & Huang, M.-Y. (2021). Demand-pull vs supply-push strategy: the effects of organizational structure on supply chain integration and response capabilities. *Journal of Manufacturing Technology Management*, *32*(8), 1493–1514. https://doi.org/10.1108/JMTM-08-2020-0324

Chin, T., Hamid, A., & Baharun, A. (2012). Adoption of supply chain management in SMEs. *Social and Behavioural Sciences*, *65*(1), 614–619.

Dominowski, R. L. (1980). *Research methods*. Prentice-Hall.

Fekpe, E., & Delaporte, Y. (2019). Sustainability integration and supply chain performance of manufacturing small and medium size enterprises. *African Journal of Economic and Management Studies*, *10*(2), 130–147. https://doi.org/10.1108/AJEMS-05-2018-0152

Ferraris, A., Mazzoleni, A., Devalle, A., & Couturier, J. (2019). Big data analytics capabilities and knowledge management: impact on firm performance. *Management Decision*, *57*(8), 1923–1936. https://doi.org/10.1108/MD-07-2018-0825

Fonseca, P., & Picoto, W. N. (2020). The competencies needed for digital transformation. *Online Journal of Applied Knowledge Management*, *8*(2), 53–70. https://doi.org/10.36965/OJAKM.2020.8(2)53-70

Fornell, C., & Larcker, D. F. (1981). Evaluating structural equation models with unobservable variables and measurement error. *Journal of Marketing Research*, *18*(1), 39–50. https://doi.org/10.1177/002224378101800313

Foroudi, P., Gupta, S., Nazarian, A., & Duda, M. (2017). Digital technology and marketing management capability: achieving growth in SMEs. *Qualitative Market Research*, *20*(2), 230–246. https://doi.org/10.1108/QMR-01-2017-0014

García, P. A., García, H., Gardó, T., & Vivas, N. (2021). Dynamic marketing capabilities as drivers of international channel integration: is this true for Latin American SMEs? *Qualitative Market Research*, *24*(5), 653–682.

Hair, J. F., Howard, M. C., & Nitzl, C. (2020). Assessing measurement model quality in PLS- SEM using confirmatory composite analysis. *Journal of Business Research*, *109*, 101–110. https://doi.org/10.1016/j.jbusres.2019.11.069

Hamisi, S. (2011). Challenges and opportunities of Tanzanian SMEs in adapting supply chain management. *African Journal of Business Management*, *5*(4), 1266–1276.

Hautala-Kankaanpää, T. (2022). The impact of digitalization on firm performance: examining the role of digital culture and the effect of supply chain capability. *Business Process Management Journal*, *28*(8), 90–109. https://doi.org/10.1108/BPMJ-03-2022-0122

Hayes, A. F. (2022). *Introduction to mediation, moderation, and conditional process analysis: A regression-based approach* (3rd ed.). The Guilford Press.

Hendijani, R., & Norouzi, M. (2023). Supply chain integration and firm performance in the COVID-19 era: the mediating role of resilience and robustness. *Journal of Global Operations and Strategic Sourcing*, *16*(2), 337–367. https://doi.org/10.1108/JGOSS-03-2022-0022

Heredia, J., Castillo-Vergara, M., Geldes, C., Gamarra, F., Flores, A., & Heredia, W. (2022). How do digital capabilities affect firm performance? The mediating role of technological capabilities in the new normal. *Journal of Innovation & Knowledge*, *7*(2), 100171. https://doi.org/10.1016/j.jik.2022.100171

Holopainen, M., Saunila, M., & Ukko, J. (2022). Facilitating performance measurement and management through digital business strategy. *Measuring Business Excellence*, *27*(2), 246–260. https://doi.org/10.1108/MBE-01-2022-0015

Hu, M., Jiang, S., & Huo, B. (2023). The impacts of supply visibility and demand visibility on product innovation: the mediating role of supply chain integration. *The International Journal of Logistics Management*, *35*(2), 456–482. https://doi.org/10.1108/IJLM-01-2021-0033

Hussein, K., & Song, D.-W. (2024). Port supply chain integration and sustainability: a resource- based view. *The International Journal of Logistics Management*, *35*(2), 504–530. https://doi.org/10.1108/IJLM-11-2022-0435

Irfan, M., & Wang, M. (2019). Data-driven capabilities, supply chain integration and competitive performance: Evidence from the food and beverages industry in Pakistan. *British Food Journal*, *121*(11), 2708–2729. https://doi.org/10.1108/BFJ-02-2019-0131

Israel, B. (2022). Enhancing customer retention in manufacturing SMEs through supply chain innovative practices. *Management Dynamics in the Knowledge Economy*, *10*(3), 272–286. https://doi.org/10.2478/mdke-2022-0018

Jardak, M. K., & Hamad, S. (2022). The effect of digital transformation on firm performance: evidence from Swedish listed companies. *The Journal of Risk Finance*, *23*(4), 329–348. https://doi.org/10.1108/JRF-12-2021-0199

Jum'a, L., & Bushnaq, M. (2024). Investigating the role of flexibility as a moderator between supply chain integration and firm performance: the case of manufacturing sector. *Journal of Advances in Management Research*, *21*(2), 203–227. https://doi.org/10.1108/JAMR-07-2023-0188

Khattak, A., Tabash, M. I., Yousaf, Z., Radulescu, M., Nassani, A. A., & Haffar, M. (2022). Towards innovation performance of SMEs: investigating the role of digital platforms, innovation culture and frugal innovation in emerging economies. *Journal of Entrepreneurship in Emerging Economies*, *14*(5), 796–811. https://doi.org/10.1108/JEEE-08-2021-0318

Khin, S., & Ho, T. C. (2020). Digital technology, digital capability and organizational performance: A mediating role of digital innovation. *International Journal of Innovation Science*, *11*(2), 177–195. https://doi.org/10.1108/IJIS-08-2018-0083

Kumburu, N., Kessy, J., & Mbwambo, S. (2021). Factors affecting competitive advantage of Sido supported small scale furniture industries in Dar Es Salaam and Arusha Regions, Tanzania. *Journal of Co-Operative and Business Studies*, *4*(2), 9–22.

Kyagante, F., Tukamuhabwa, B., Makepu, J. N., Mutebi, H., & Waiswa, C. (2024). The mediating role of information integration: information technology capabilities and supply chain resilience in Ugandan agro-food processing firms. *Continuity & Resilience Review*, *6*(1), 28–47. https://doi.org/10.1108/CRR-11-2023-0020

Lelo, J. M., & Israel, B. (2024). Supply chain innovative practices and customer satisfaction: Insights from manufacturing SMEs. *Management Dynamics in the Knowledge Economy*, *12*(1), 54–69. https://doi.org/10.2478/mdke-2024-0004

Lütjen, H., Schultz, C., Tietze, F., & Urmetzer, F. (2019). Managing ecosystems for service innovation: A dynamic capability view. *Journal of Business Research*, *104*, 506–519. https://doi.org/10.1016/j.jbusres.2019.06.001

Madatta, L. J., & Chen, Q. (2020). Examining challenges facing SMEs businesses in Dar Es Salaam Tanzania: A case study of Ilala and Kinondoni municipalities. *Journal of Economics and Sustainable Development*, *11*(17), 59–69.

Mwenda, B., Israel, B., & Mahuwi, L. (2023). The influence of sustainable supply chain management practices on financial sustainability of food processing SMEs. *LBS Journal of Management & Research*, *21*(2), 218–235. https://doi.org/10.1108/LBSJMR-01-2023-0003

Nasiri, M., Saunila, M., & Ukko, J. (2022). Digital orientation, digital maturity, and digital intensity: Determinants of financial success in digital transformation settings. *International Journal of Operations & Production Management*, *42*(13), 274–298. https://doi.org/10.1108/IJOPM-09-2021-0616

National Bureau of Statistics (NBS). (2020). *Quarter three gross domestic report*. Tanzania Government Press.

Nayal, K., Raut, R., Priyadarshinee, P., Narkhede, B. E., Kazancoglu, Y., & Narwane, V. (2022). Exploring the role of artificial intelligence in managing agricultural supply chain risk to counter the impacts of the COVID-19 pandemic. *The International Journal of Logistics Management*, *33*(3), 744–772. https://doi.org/10.1108/IJLM-12-2020-0493

North, K., Aramburu, N., & Lorenzo, O. J. (2020). Promoting digitally enabled growth in SMEs: a framework proposal. *Journal of Enterprise Information Management*, *33*(1), 238–262. https://doi.org/10.1108/JEIM-04-2019-0103

Novais, L., Maqueira Marín, J. M., & Moyano-Fuentes, J. (2020). Lean production implementation, cloud-supported logistics and supply chain integration: Interrelationships and effects on business performance. *The International Journal of Logistics Management*, *31*(3), 629–663. https://doi.org/10.1108/IJLM-02-2019-0052

Nwankpa, J. K., & Roumani, Y. (2016). *IT capability and digital transformation: A firm performance perspective* [Paper presentation]. Thirty Seventh International Conference on Information Systems, Dublin.

Nzumbi, N. E., & Misungwi, L. (2019). Challenges facing growth of small business: A case of Ngongongare village in Arusha, Tanzania. *International Journal of Academic Research in Business and Social Sciences*, *9*(10), 67–82. https://doi.org/10.6007/IJARBSS/v9-i10/6457

Patil, K., Garg, V., Gabaldon, J., Patil, H., Niranjan, S., & Hawkins, T. (2023). Firm performance in digitally integrated supply chains: A combined perspective of transaction cost economics and relational exchange theory. *Journal of Enterprise Information Management*, *37*(2), 381–413. https://doi.org/10.1108/JEIM-09-2022-0335

Podsakoff, P. M., MacKenzie, S. B., Lee, J. Y., & Podsakoff, N. P. (2003). Common method biases in behavioral research: A critical review of the literature and recommended remedies. *The Journal of Applied Psychology*, *88*(5), 879–903. https://doi.org/10.1037/0021-9010.88.5.879

Qiao, R., & Zhao, L. (2023). Reduce supply chain financing risks through supply chain integration: dual approaches of alleviating information asymmetry and mitigating supply chain risks. *Journal of Enterprise Information Management*, *36*(6), 1533–1555. https://doi.org/10.1108/JEIM-01-2023-0016

Rai, A., Patnayakuni, R. and Seth, N. (2006). Firm performance impacts of digitally enabled supply chain integration capabilities. *MIS Quarterly*, *30*(2), 225–246. https://doi.org/10.2307/25148729

Rajala, A., & Hautala-Kankaanpää, T. (2023). Exploring the effects of SMEs' platform-based digital connectivity on firm performance–the moderating role of environmental turbulence. *Journal of Business & Industrial Marketing*, *38*(13), 15–30. https://doi.org/10.1108/JBIM-01-2022-0024

Saunders, M., Lewis, P., & Thornhill, A. (2019). *Research methods for business students* (8th ed.). Pearson Education Limited.

Song, H., Yu, K., Ganguly, A., & Turson, R. (2016). Supply chain network, information sharing and SME credit quality. *Industrial Management & Data Systems*, *116*(4), 740–758. https://doi.org/10.1108/IMDS-09-2015-0375

Sousa-Zomer, T. T., Neely, A., & Martinez, V. (2020). Digital transforming capability and performance: A micro-foundational perspective. *International Journal of Operations & Production Management*, *40*(7/8), 1095–1128. https://doi.org/10.1108/IJOPM-06-2019-0444

Sundram, V. P. K., Bahrin, A. S., Abdul Munir, Z. B., & Zolait, A. H. (2018). The effect of supply chain information management and information system infrastructure: The mediating role of supply chain integration towards manufacturing performance in Malaysia. *Journal of Enterprise Information Management*, *31*(5), 751–770. https://doi.org/10.1108/JEIM-06-2017-0084

Teece, D. J. (2016). Dynamic capabilities and entrepreneurial management in large organizations: towards a theory of the (entrepreneurial) firm. *European Economic Review*, *86*, 202–216. https://doi.org/10.1016/j.euroecorev.2015.11.006

Teece, D. J., Pisano, G., & Shuen, A. (1997). Dynamic capabilities and strategic management. *Strategic Management Journal*, *18*(7), 509–533. https://doi.org/10.1002/(SICI)1097-0266(199708)18:7<509::AID-SMJ882>3.0.CO;2-Z

Turulja, L., & Bajgorić, N. (2015). Information Technology Capability and Its Impact on Firms Performance. *2015 ENTRENOVA Conference Proceedings*, Available at SSRN: https://ssrn.com/abstract=3280270 or http://dx.doi.org/10.2139/ssrn.328027.

United Nations (UN). (2020). *Tanzanian industrial SMEs cluster mapping report*. Climate Technology Centre and Network.

United Republic of Tanzania (URT). (2003). *Small and medium enterprises development policy*. Ministry of Industry and Trade.

Usai, A., Fiano, F., Petruzzelli, A. M., Paoloni, P., Briamonte, M. F., & Orlando, B. (2021). Unveiling the impact of the adoption of digital technologies on firms' innovation Performance. *Journal of Business Research*, *133*, 327–336. https://doi.org/10.1016/j.jbusres.2021.04.035

Wang, F. (2020). Digital marketing capabilities in international firms: a relational perspective. *International Marketing Review*, *37*(3), 559–577. https://doi.org/10.1108/IMR-04-2018-0128

World Bank. (2020). *Small and medium enterprises (SMEs): Finance improving SMEs' access to finance and finding innovative solutions to unlock sources of capital*. World Bank and Oxford University Press.

Wu, W., Hong, C., & Muhammad, A. (2020). The Spillover effect of export processing zones. *China Economic Review*, *63*, 101478. https://doi.org/10.1016/j.chieco.2020.101478

Yamane, T. (1973). *Statistics: An introductory analysis*. John Weather Hill, Inc.

Yu, W., Wong, C. Y., Chavez, R., & Jacobs, M. (2023). Surfing with the tides: How digitalization creates firm performance through supply chain entrainment. *International Journal of Operations & Production Management*, *43*(12), 2008–2030. https://doi.org/10.1108/IJOPM-10-2022-0678

Yu, Y., Huo, B., & Zhang, Z. (2021). Impact of information technology on supply chain integration and company performance: Evidence from cross-border e-commerce companies in China. *Journal of Enterprise Information Management*, *34*(1), 460–489. https://doi.org/10.1108/JEIM-03-2020-0101

Zhu, Z., Lin, S., Jiang, Y., & Liu, Q. (2022). The coordination effect of B2B digital process capabilities on competitive performance: Balancing or complementing. *Journal of Enterprise Information Management*, *35*(3), 918–946. https://doi.org/10.1108/JEIM-01-2021-0037